kiwi now

Just **install** me

It's super easy – thanks to the easy-**click-system**!
kiwi-floors.com

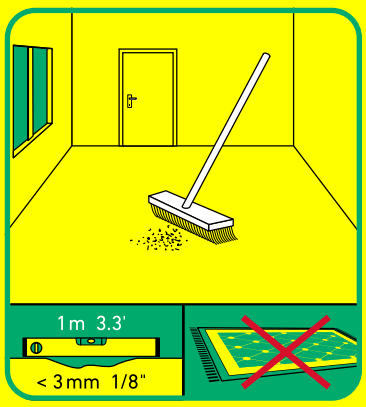

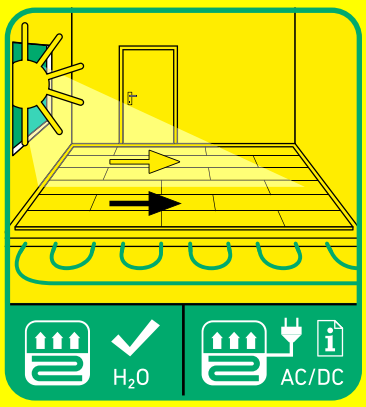

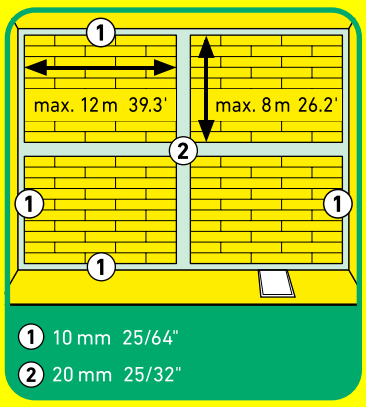

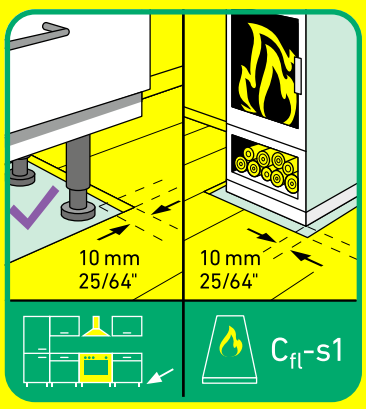

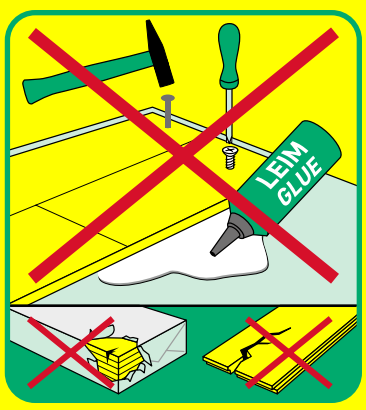

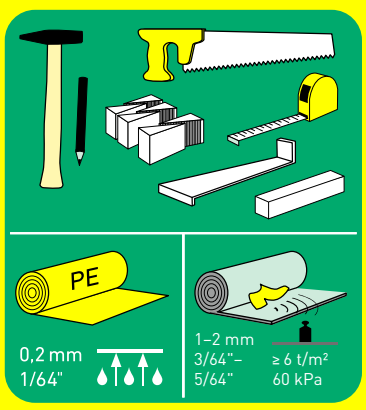

Stand 0424

1
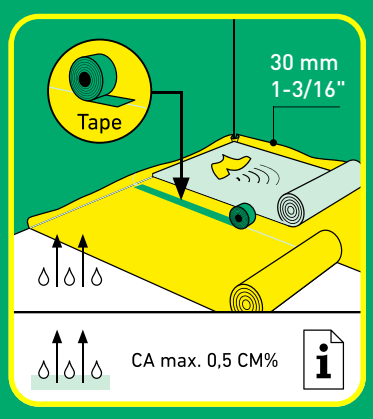

2
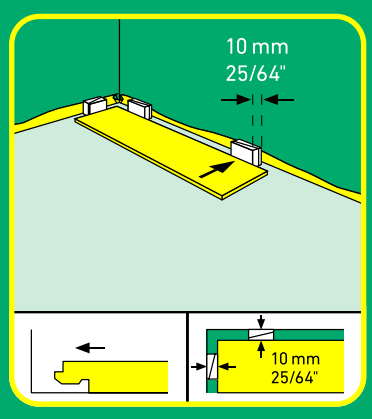

3
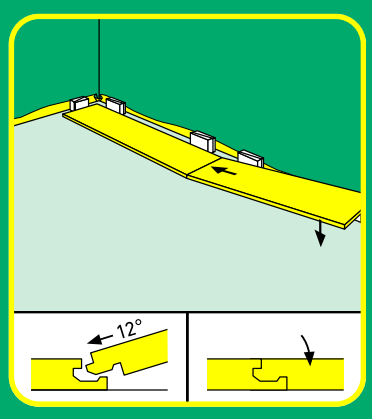

4
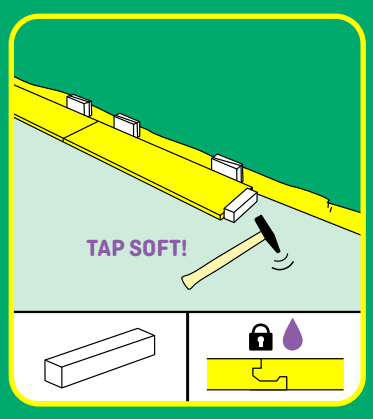

5
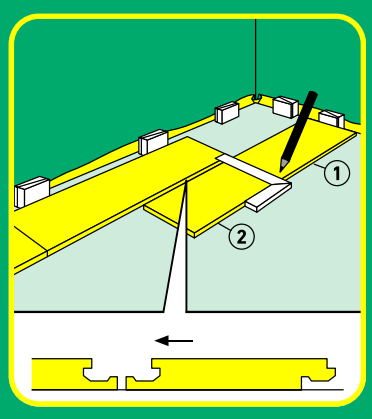

6
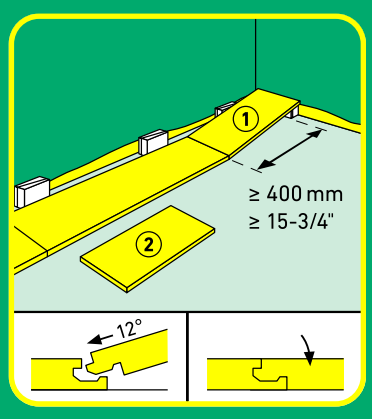

7
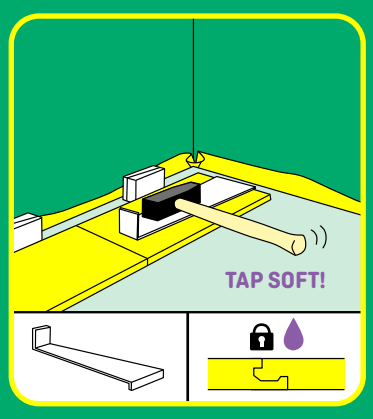

8
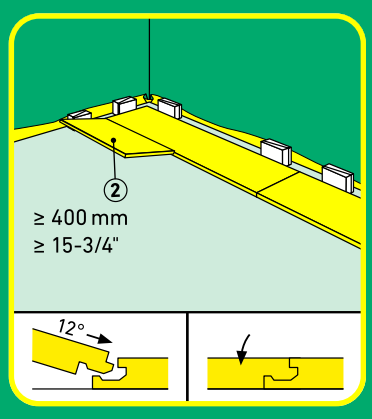

9
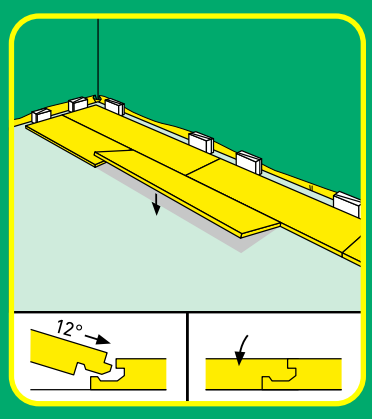

10
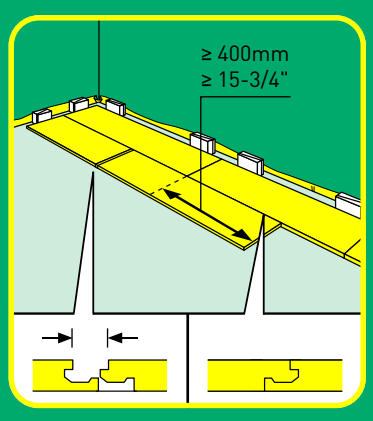

11
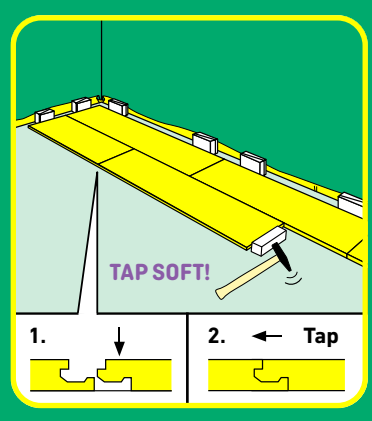

12
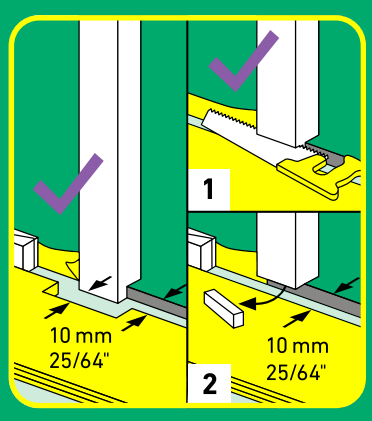

13
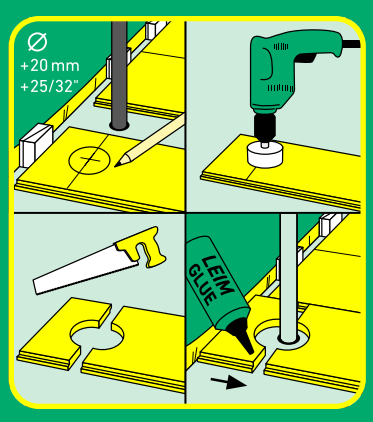

14
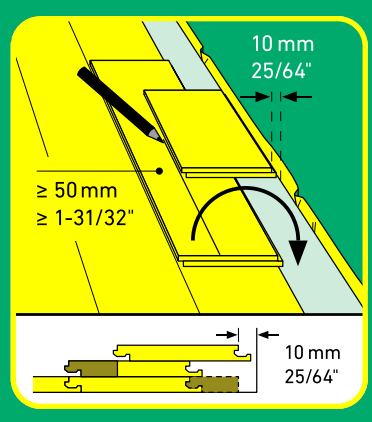

15
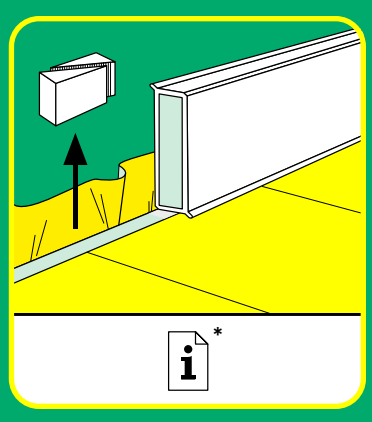

16

17
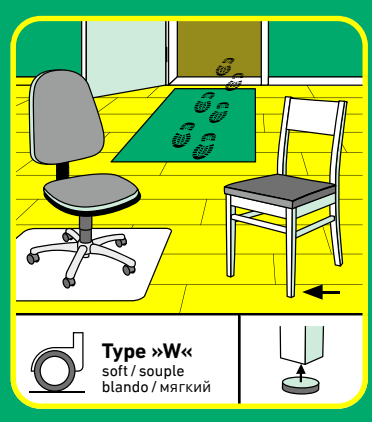

REMOVE

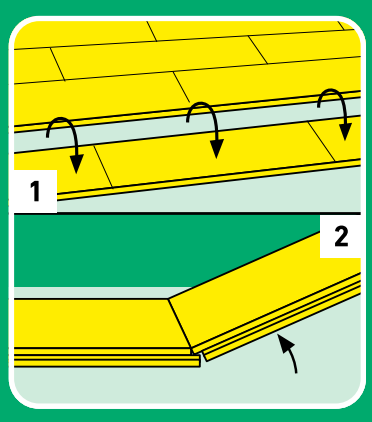

* SKIRTING BOARDS AQUA 60 // AQUA 80: HDF core, white, wrapped with chlorine-free PP/TPE based polyblend with flexible top and bottom soft lips